SH-EQ5 Wiring
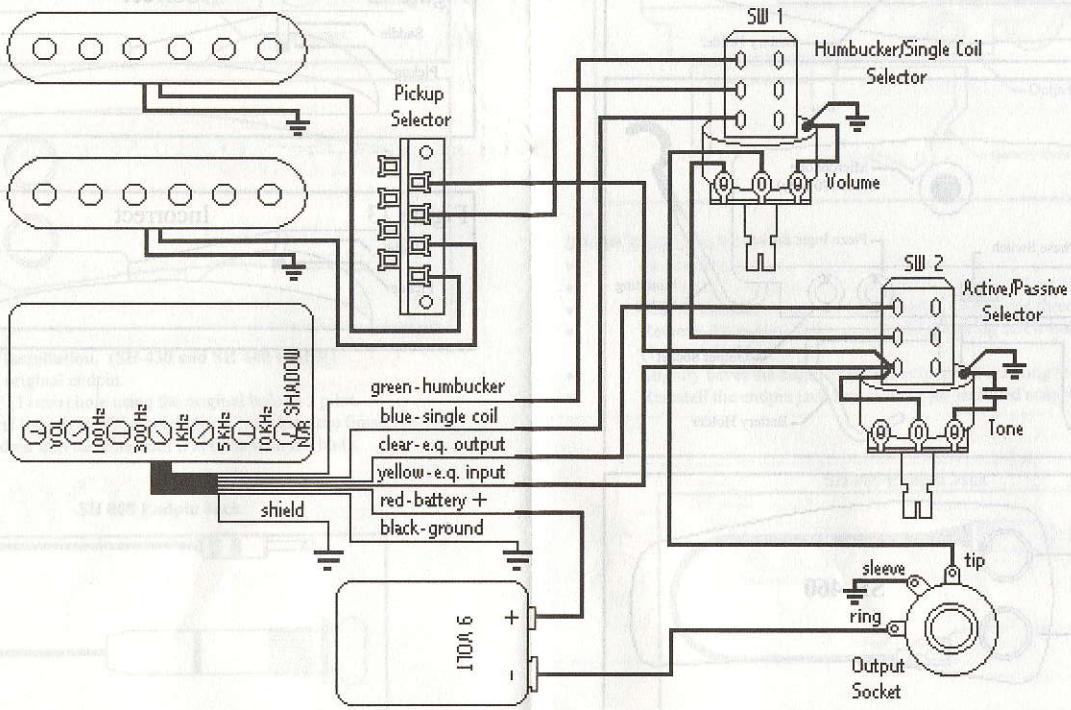
This wiring schematic shows how to wire the SH-EQ5 and two additional passive pickups (SH 660 shown) with switching for single coil and passive modes. In this example, switch 1 (SW1) is a push pull switch on the volume control pot and selects between humbucker (switch down) and single coil (switch up) mode. Switch 2 (SW2) selects between "active" (EQ on) mode (switch down) and "passive" (EQ off) mode (switch up). It is also possible to use SPST mini toggle switches instead of the push/pull switches. Note that the passive pickups also go through the EQ/preamp circuit and become active. Battery power is switched on by plugging a cable into the output socket so for maximum battery life, always unplug the cable from the socket when not in use. When the sound becomes weak or distorted, replace the battery. When the battery is dead, it is still possible to play the instrument in the "passive" mode.