EL GRITON 2.2

Rev.1.May 4.2004

This layout can be made to work like the Ibanez Tube screamer TS-9, TS-808 or the BOSS SD-1. These circuits are very similar, so much that they can be constructed around the same printed circuit board. Most of the parts are common to both circuits, the ones that aren't are outlined red on the layout, use the parts list to substitute with the values for the circuit you choose to build. Off board components except for the potentiometers are not shown on the layout. Tube Screamer, TS-9, TS-808 are registered trademarks owned by Ibanez.

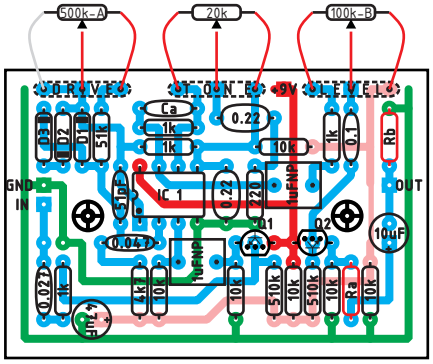

LAYOUT

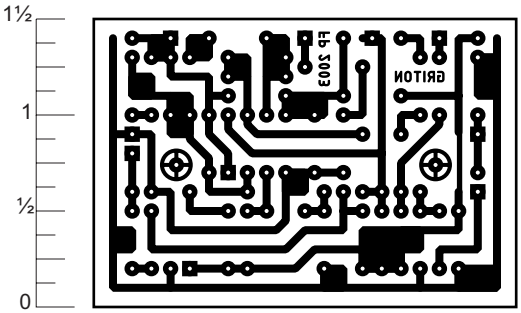

READY TO TRANSFER

Common parts

Resistors
6 - 10k
4 - 1k
2 - 510k
1 - 4k7
1 - 51k
1 - 220
1 - 2M2 (2.2M)

Pots
1 - 20k lin.
1 - 500k log.
1 - 100k lin.

Capacitors
2 - 1µF / NP
2 - 0.22 µF Tant.
1 - 0.047µF
1 - 0.027 µF
1 - 47 µF
1 - 10 µF
1 - 0.1 µF
1 - 51pF

Transistors &ICs
2 - 2N3904
IC1 - 4558

TS-808 Parts
Ra - 100
Rb - 10k
Ca - Nothing*
*Leave empty

TS-9 Parts
Ra - 470
Rb - 100k
Ca - Nothing*
*Leave empty

Clipping Diodes
Symetrical
D1 - 1N914*
D2 - 1N914*
D3 - Jumper

Asymetrical
D1 - 1N914*
D2 - 1N914*
D3 - 1N914*
*Other diodes will work

Layout and presentation by Francisco Peña 2001 2002®.
All rights reserved. Authorization for personal use only,
any commercial use is forbidden.
Permission for posting/serving limited to
http://www.tonepad.com
Permission refused for posting from other sites.
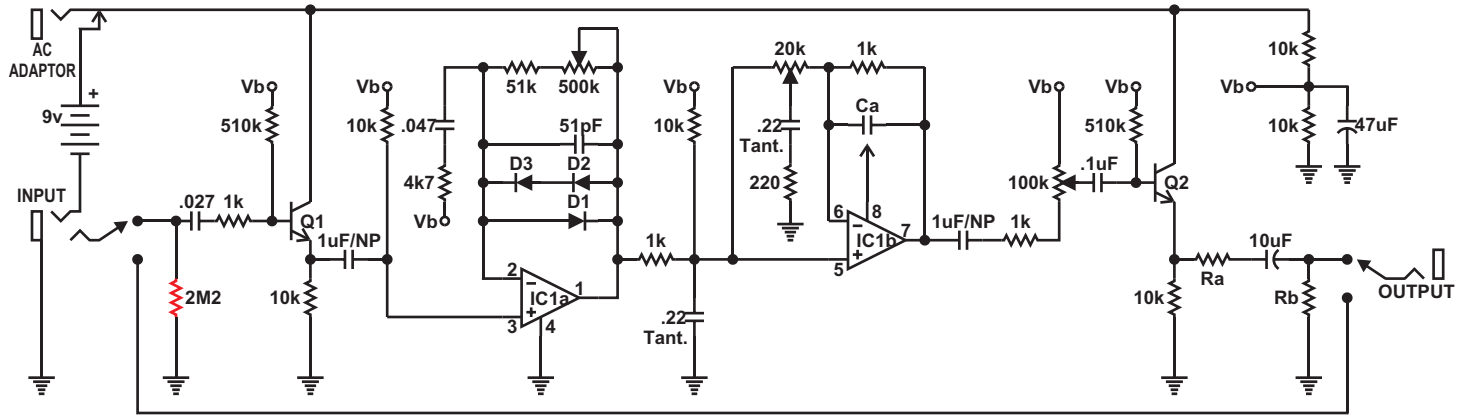
Schematic